Hover Racer

WARNING:
CHOCKING HAZARD - Small parts.
Not for Children under 3 years.
To Parents: Please read all instructions before giving guidance to your children.

A. SAFETY MESSAGES

1. This kit is intended for children aged 10 and over. All project-related assembly and operations should be done under adult supervision.
2. This kit and the finished product contain small parts which may constitute a choking hazard if used inappropriately. Keep away from children under 3 years of age.
3. To prevent potential short-circuits, never touch the contacts inside the battery compartment with any metal object.
4. Carefully examine the plastic propeller before you put in on the motor spindle. If you see any defects in the blades or on the outer rim, do not run the motor. Refer to the Questions and Comments section on this sheet and contact our customer service for a replacement.
5. The propeller spins at high speed when the motor is turned on. To prevent potential injuries, do not touch it with your fingers or any objects. Adult supervision is required throughout.
6. Verify that the switch is turned off when inserting/replacing the batteries. Otherwise the propeller will spin immediately once all batteries are installed

B. USE OF BATTERIES

1. This kit requires four AAA, 1.5-volt batteries (not included).
2. For best results, always use fresh batteries.
3. Insert the batteries in the battery compartment according to the correct polarities.
4. Remove the batteries when not in use.
5. To prevent potential damage to the kit, immediately replace drained batteries.
6. Rechargeable batteries must be removed from the kit before recharging.
7. Rechargeable batteries must be recharged under adult supervision.
8. Do not attempt to charge non-rechargeable batteries.
9. Do not mix old and new batteries.
10. Do not mix alkaline, standard (Carbon-Zinc) or rechargeable (Nickel-Cadmium) batteries.
11. Ensure that the supply terminals are not short-circuited.

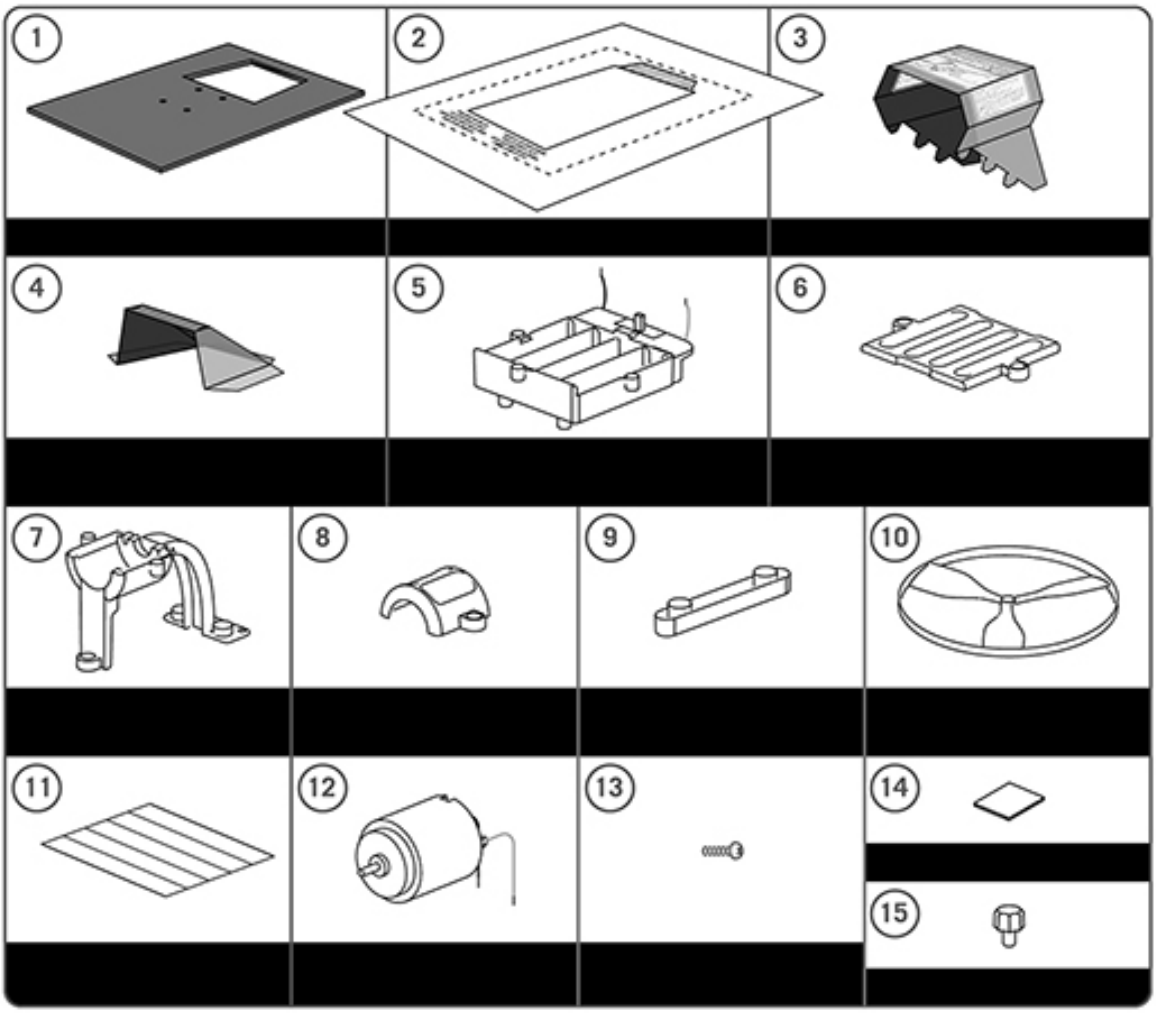

C. CONTENTS
1. 1 x base panel,
2. 1 x plastic skirt,
3. 1 x arch template,
4. 1 x duct template,
5. 1 x battery compartment with switch and wires,
6. 1 x battery compartment cover,
7. 1 x motor stand,
8. 1 x motor cover,
9. 2 x attachment bar,
10. 1 x propeller,
11. 1 x double-sided adhesive tape,
12. 1 x motor with wires,
13. screws,
14. 1 x reusable adhesive ,
15. 2 x terminal cap,
and 1 set of detailed instruction.
(Also required but not included: 4 x AAA, 1.5 volt batteries, small crosshead screwdriver.)

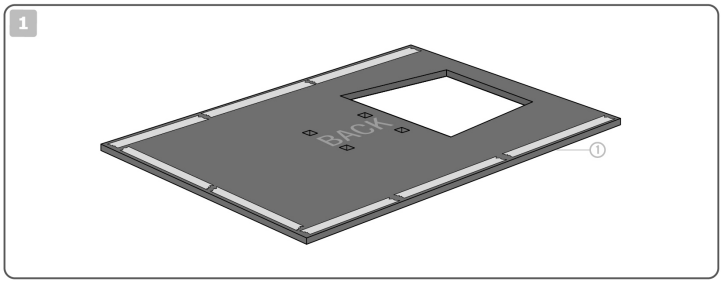

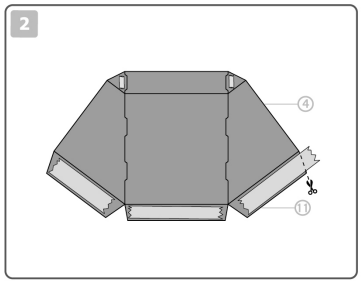

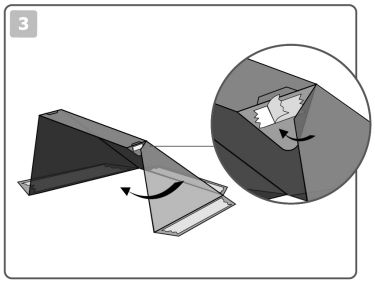

D. ASSEMBLY
Follow these steps to assemble your Hover Racer.
Assembling the hover base body
1. Take the base panel. Apply double-sided adhesive tape along the three edges on one side as shown.
2. Apply double-sided adhesive tape on one side of the duct template as shown. Trim the excess tape.
3. Peel off the backing from the two smaller pieces of the tape. Apply the pieces of tape to the duct template and fold it into shape.

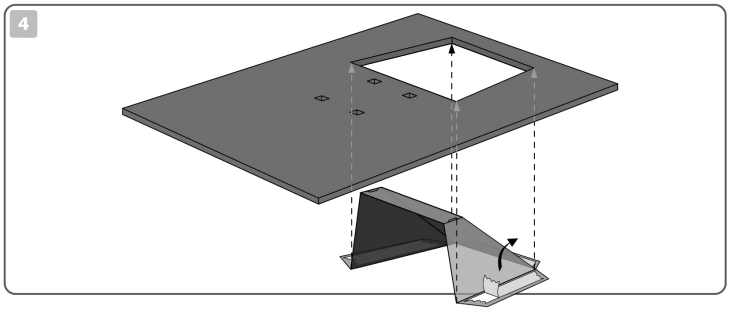

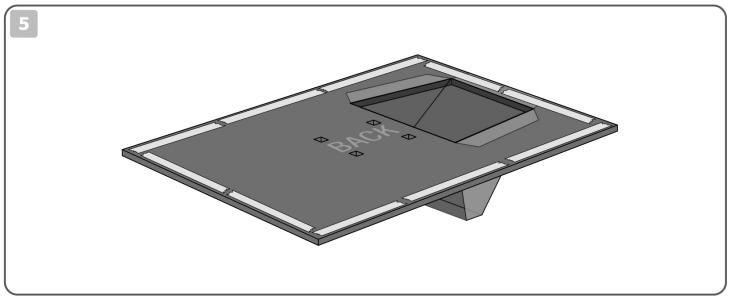

4. Remove the backing from the remaining pieces of tapes on the duct template. Push it up through the cut-out in the base so that its side tabs stick to the underside of the base.
5. Turn to the back of the base again. Apply a length of double-sided adhesive tape to the rear edge of the base panel. Trim the excess tape. This will be used for sticking on the skirt in the later steps.

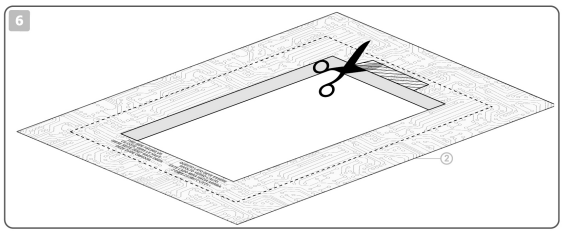

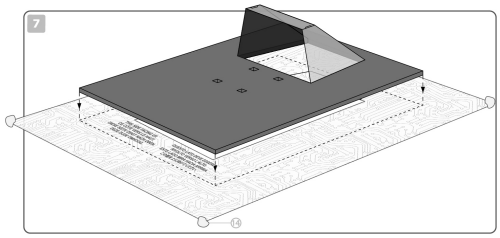

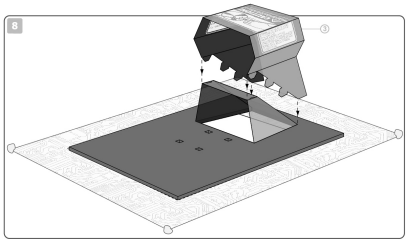

6. Pick up the plastic skirt. The skirt is composed of two layers of plastic. On one layer there is a printed shaded area. Cut this area away with a pair of scissors. Remarks: Do not cut both layers of the skirt, instead only the specified layer.
7. Place the plastic skirt on a flat surface, with the cut side facing up (see step 6). You should be able to read the printed remark "This side facing up". Press the plastic to make it as flat as possible. Secure it in position by applying reusable adhesives to the corners, as shown. Remove the backing from the double-sided adhesive tape around the edge of the base. Pick up the base panel and position it so that the duct is directly on top of the plastic skirt's inner rim where the shaded surface has been cut. You may now very slowly lower the base onto the plastic skirt. Ensure that the base is placed centrally over the skirt with the edges aligned with the dotted lines printed on the plastic skirt. (Tip: you can line up two books along the dotted lines. Use them as a guide when lowering the base panel. This will help you to adhere the panel centrally on the skirt.) Press firmly down on the base to ensure that the skirt sticks to the tape. Afterwards, remove the reusable adhesives at the four corners of the plastic skirt.
8. Fold the arch template into shape and insert its tabs into the slots in the duct.

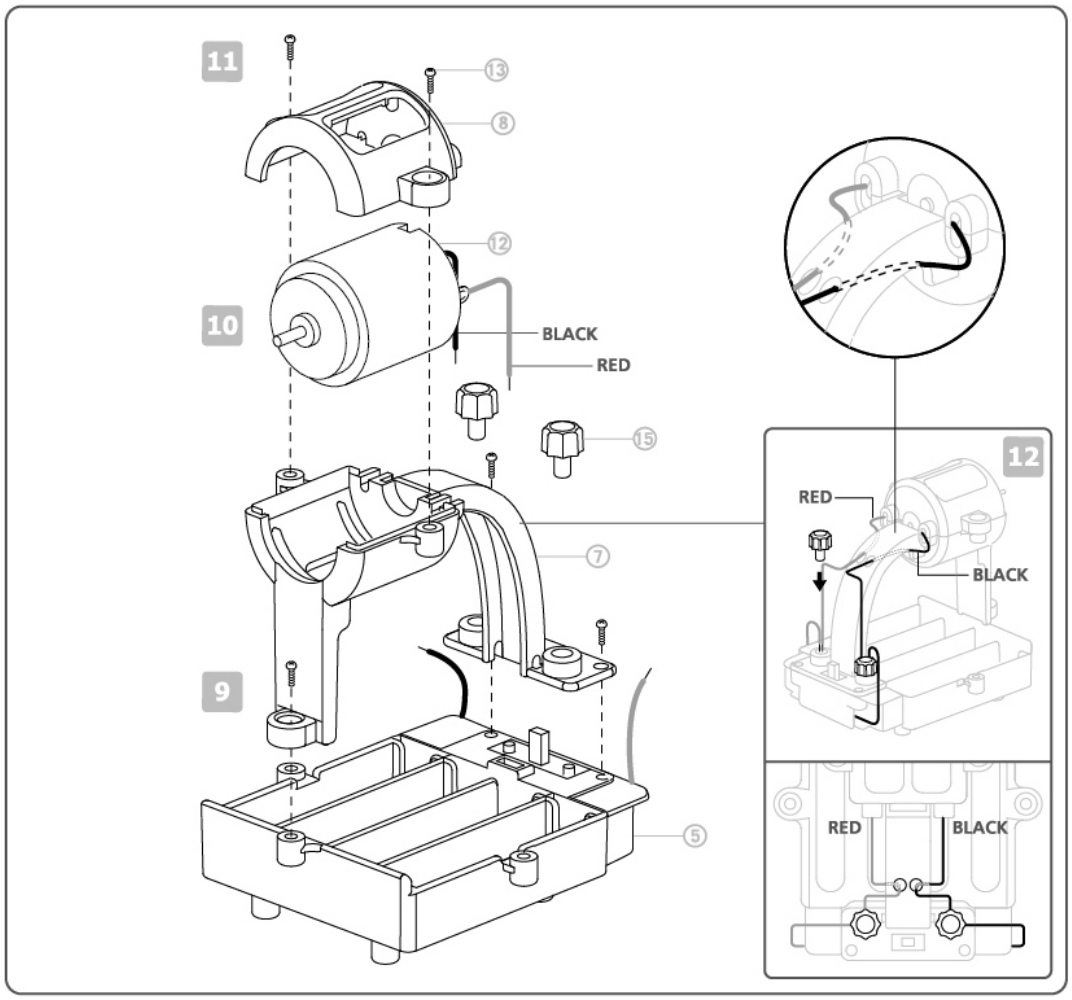

Assembling the propeller engine
9. Place the motor stand on the battery compartment and secure it with three screws.
10. Place the motor inside the motor stand, with the wires pointing towards the curved leg of the stand. Feed the wires down through the holes at the top of the stand, and out through the hole at the bottom.
11. Add the motor cover and secure it with two screws.
12. Insert a wire from the motor and the same colour wire from the battery compartment into one of the terminal holes next to the switch and secure them with a terminal cap. Repeat with the other two wires in the other terminal hole.

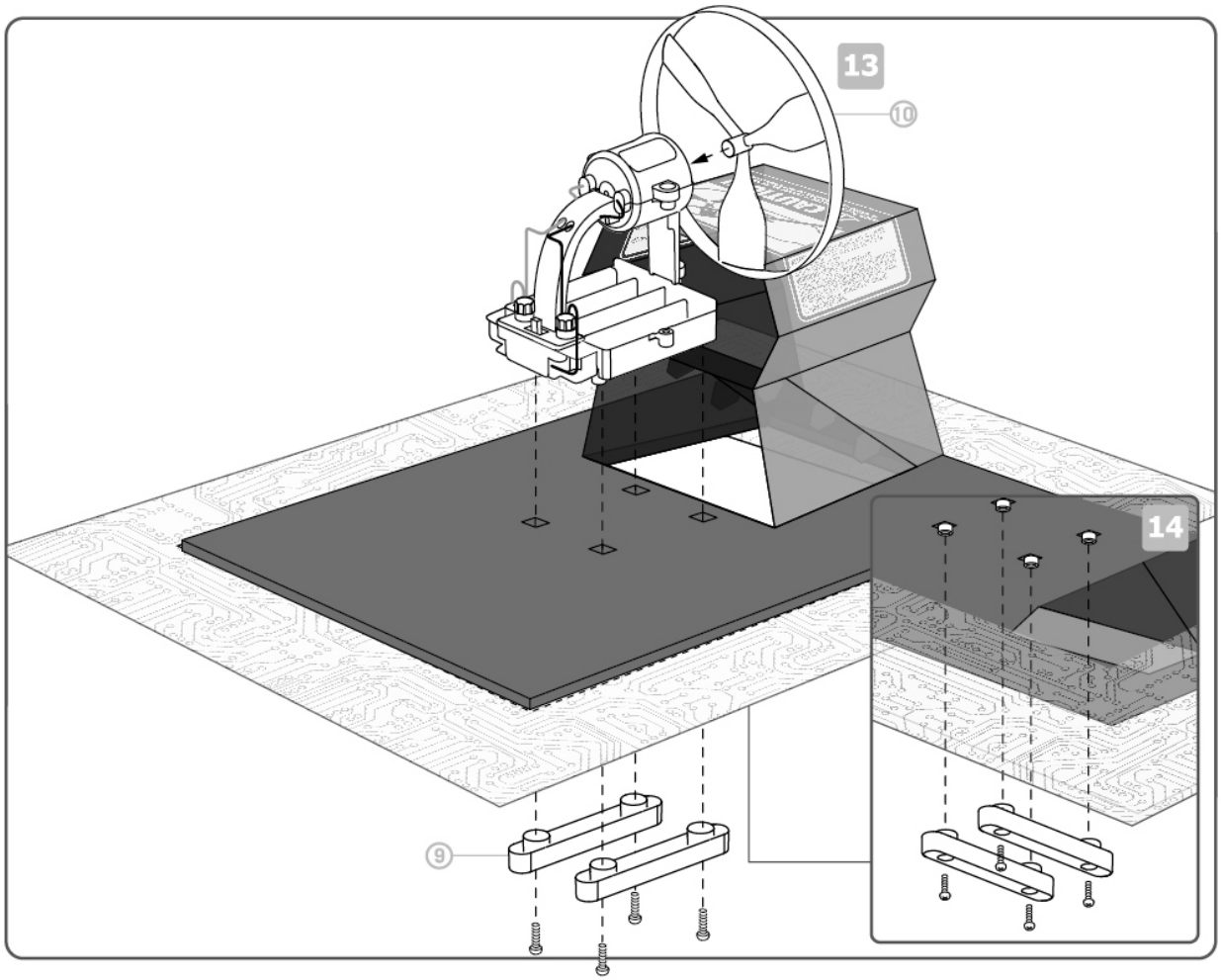

13. Push the propeller firmly onto the motor spindle.
14. Push the fixing bars into their holes under the base. Put the battery compartment in place (with the propeller towards the duct) so that the pegs on its underside fit into the holes in the attachment bars. Secure the bars to the battery compartment with four screws.

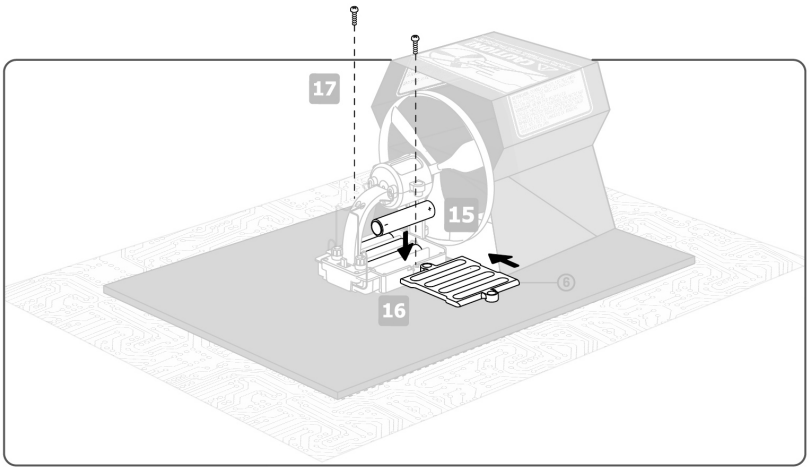

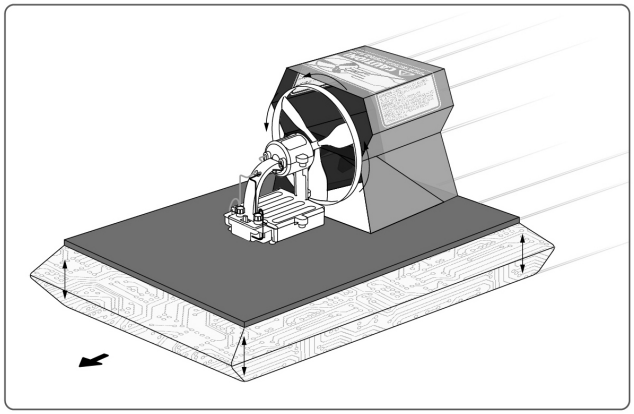

Inserting the batteries
15. Make sure the switch is off. Insert four AAA batteries into the battery compartment. The negative terminal of each battery (the flat end) goes against one of the springs in the battery compartment.
16. Slide and add the battery compartment cover.
17. Secure the cover with two screws.
Holding onto the base, and keeping your fingers clear of the propeller, switch on the motor. The propeller should blow air into the duct. If it blows air towards the motor, swap the wires from the motor over in the terminal holes and try again.
Congratulations! Your Hover Racer is complete.

E. OPERATION

Warning: Always check the propeller is not broken before each use.
Place your Hover Racer on a wood or tiled floor and aim it away from any obstructions. Turn on the motor. The skirt should inflate and the Hover Racer should move forward, skimming across the floor. Real hovercraft can travel across water, but don't try to operate your model Hover Racer over water, as it will become damaged should it be submerged.

F. TROUBLESHOOTING

If the motor does not run:
- **Check that you are using fresh batteries.**
- **Check that the batteries are inserted correctly in the battery compartment.**
- **Check that all four wires are connected in the terminal holes.**

If the propeller blows air forwards instead of backwards, swap the wires from the motor in the terminal holes.
If the skirt does not inflate properly:
- **Check that your batteries are fresh (run down batteries will not run the propeller fast enough to inflate the skirt).**
- **Check that the duct is stuck firmly to the underside of the base.**
- **Check that the skirt is fixed firmly to the underside of the base, and that the bottom layer of the plastic is not stuck anywhere, so that the skirt can inflate.**

If your Hover Racer does not move forward:
- **Check that the arch template is installed correctly.**
- **Gently stretch the skirt a little bit and check that it inflates to an appropriate shape.**

If your Hover Racer tilts and tends to turn to one direction:
- **Place a coin onto the base panel next to the battery compartment, on the side opposite that which the racer tends to turn. The coin helps correct the racer's centre of balance. Adjust the position of the coin to make the racer run straight. Use adhesive tape to affix it in place.**

G. HOW DOES IT WORK?

The batteries provide electricity to the motor, which turns the propeller at high speed. The propeller blades force air backwards.
The propeller blows air into the lower duct, which inflates the skirt. The air in the skirt acts like a cushion. It keeps the Hover Racer off the ground, which reduces friction between the Hover Racer and the ground, enabling the Hover Racer to easily skim along.
The propeller also pushes air backward through the top duct (the arch). According to the laws of physics, every force has an equal and opposite reaction. Therefore, when the propeller pushes air backward, the air pushes the propeller forward, which moves the Hover Racer.

H. FUN FACTS

- **Hovercraft can travel over land, mud, marshes and open water, and easily move from water to land and back again.**
- **Hovercraft can float on water even if the engine fails and the skirt deflates.**
- **Hovercraft skirts are made of rubber that is both very tough and flexible that can bend as they go over rocks, solid ground and waves.**
- **Hovercraft are steered by turning the propellers from side to side. This makes the hovercraft turn left or right as they move forward.**
- **Hovercraft are used for high-speed passenger transport, for moving cargo, and by the military for moving troops and their kit.**
- **The hovercraft was invented in the 1950s by British inventor Christopher Cockerell. He also invented the word hovercraft.**
- **The largest passenger hovercraft ever made was the SR.N4. It was 56 metres long, weighed 310 tonnes, and carried 418 passenger and 60 cars.**
- **Hovercraft enthusiasts build and race small one-person hovercraft around grass and water tracks.**
- **Several attempts have been made to build hover trains - trains supported by air cushions that run on special tracks. None have been successful.**
- **A ground-effect vehicle is like a plane that flies very close to the ground, supported by the air squeezed under its wings.**

I. QUESTIONS & COMMENTS

We treasure you as a customer and your satisfaction with this product is important to us. In case you have any comments or questions, or you find any parts of this kit missing or defective, please do not hesitate to contact our distributor in your country, whose address is printed on the package. You are also welcome to contact our marketing support team at Email: infodesk@4M-IND.com, Fax (852) 25911566, Tel (852) 28936241, Web site: WWW.4M-IND.COM